seville classics®

Under the Desk Storage- Printer Cart

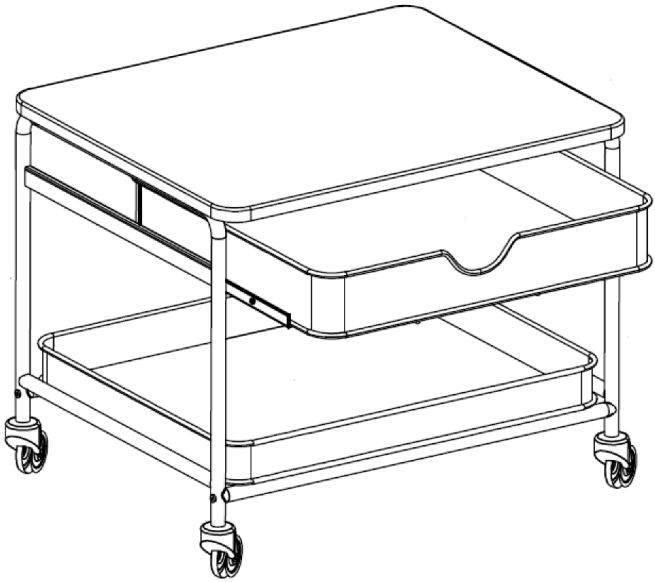

Model: WEB721

Thank you for choosing Seville Classics! We hope that you enjoy your new Utility Cart. Please read through this user guide for parts, assembly instructions, frequently asked questions and contact information

072022

Parts List

1

X1

2

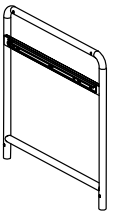

X1

3

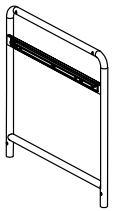

X1

4

X2

5

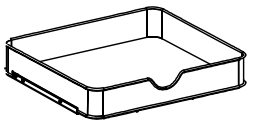

X1

6

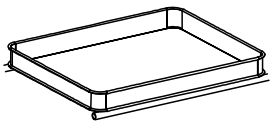

X1

A

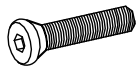

(.86" X 22mm) X4

B

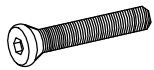

(.98" X 25mm) X8

C

X8

D

X1

E

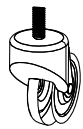

X4

F

X1

Please make sure you have all the parts on the list.

If you're missing parts, contact us for replacements at
(800) 323-5565 or send an email to Support@SevilleClassics.com

Assembly Instructions

Step 1

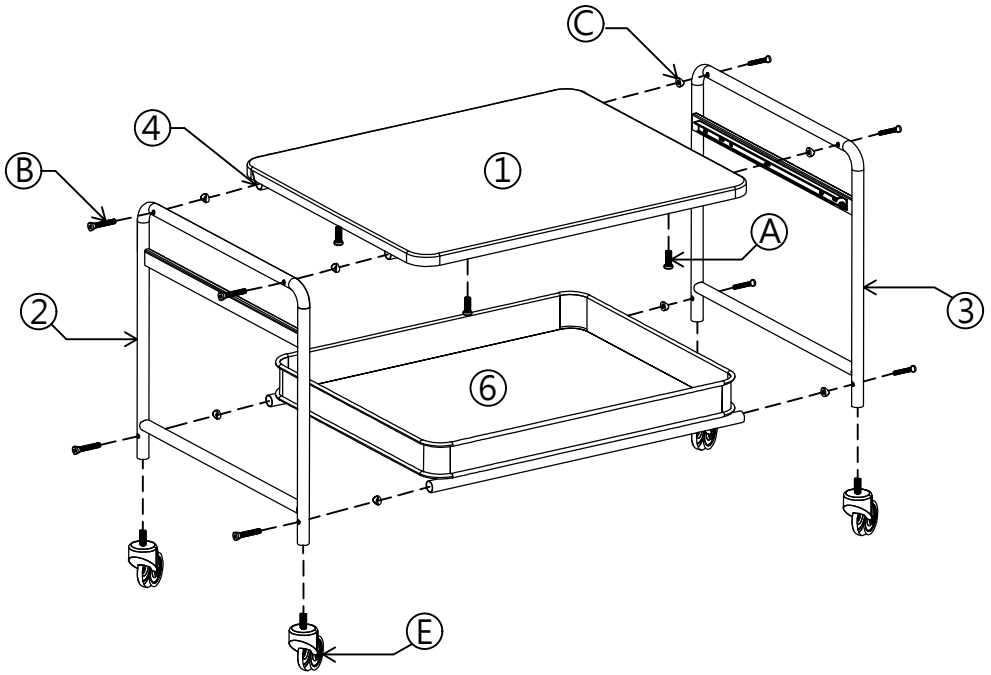

1. Secure both of the support bars (Parts 4) to the cart top (Part 1) by using 4 x screws (Part A).
2. Line up spacers (Part C) between left frame (Part 2) and support bars (Part 4). Then secure frame to top piece by inserting screw (Part B) using Allen wrench (Part D).
3. Line up spacers (Part C) between left frame (Part 2) and bottom tray (Part 6). Then secure frame and tray by inserting screw (Part B) using Allen wrench (Part D).
4. Repeat steps 2 and 3 to attach right frame (Part 3) to the cart.
5. Once all screws are secure and tight, place the cart upside down and use the wrench (Part F) to screw in the 4 x casters (Part E).

Step 2

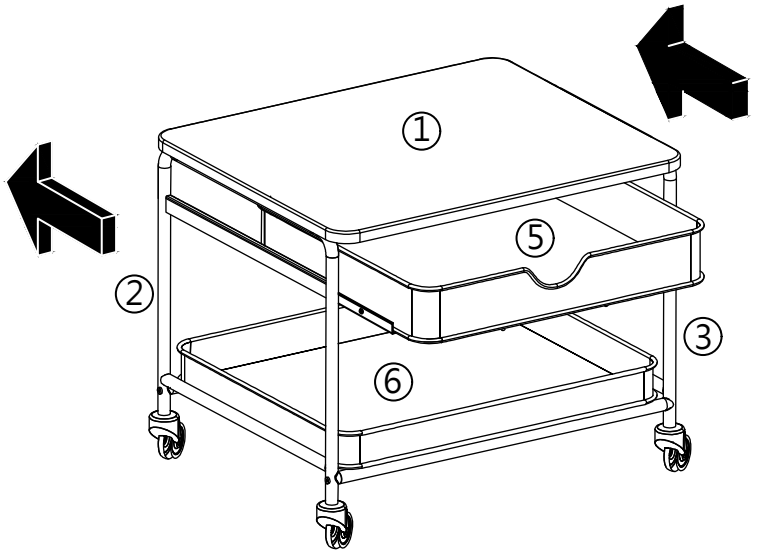

6. Once casters are secure, tilt the drawer (Part 5) slightly and align the drawer onto the glides and push the drawer in.

CAUTION: PLACE HEAVIER ITEMS ON THE LOWER SHELVES AND LIGHTER ONES ON TOP. DO NOT STAND OR SIT ON UNIT. DO NOT DROP ITEMS ONTO UNIT. EVENLY DISTRIBUTE ITEM WITHIN THE UNIT TO PREVENT TIP OVER.

Specifications

Dimensions: 21in L x 16in W x 17.78in H

Weight capacity: 200 lbs.

Weight: 20.29 lbs.

Customer Service Information

Telephone: (800) 323-5565
Fax: (310) 533-3899
Hours: 8:30 AM - 4:30 PM (PST)
Email: Support@SevilleClassics.com
Homepage: www.SevilleClassics.com