Hideaway Bed

By Nick Brady

This easy-to-build, twin-sized Murphy bed is a space-saving option for your home or cabin.





Murphy beds have always sparked my interest as a very cool idea. A bed that folds up maximizes a small space, which is super practical. And as a woodworker, building one myself makes the idea even more affordable and enticing. In the old days, the hardware that people used or invented themselves left much to be desired. It basically was just some hinges that allowed the bed box to be lowered down without regard to the weight of the box and mattress or the danger that such a large and heavy unit might pose as it swung down with force. The good news is that hardware specifically designed for Murphy beds is now available. This quality Create-A-bed product from Rockler has heavy-duty stud plates and gas springs that not only ensure safety but also ease of operation. Bringing the bed down and lifting it back up is about as simple as can be. I am sure that Mr. Murphy (yes, there was a guy named Murphy who invented this concept) would be positively impressed with our modern versions.

For me, the choice of a twin-size bed was a no-brainer for a couple of reasons. First, the room the bed was destined for would have been overwhelmed



Following the instructions provided by Create-A-Bed, get started by ripping plywood to the sizes in the* Material List.** ***It is imperative that plywood be used here, rather than MDF or particleboard.



The author used maple for this bed's solid-wood components, but any good-quality hardwood will work. Avoid softwoods for strength and safety reasons.



If you don't have a drill press, a portable drill guide, like this one from Rockler (item 52885), is just the ticket for drilling these larger holes. And even if you do have a drill press, this solution might still be easier and equally accurate.



The ends of the side rails have a large radius. Lay out the curve as shown in the instructions provided by the manufacturer. The exposed edges of the side rails will be covered with iron-on hardwood banding later on.



With a buddy holding the opposite end of the side rail, the author cuts the curve into the end of this plywood side rail. Then the curve is sanded smooth to remove saw marks and help to fair it further.

by a full- or queen-size bed. They would have fit, but a lot of furniture would have needed to be moved each time the bed was lowered. And second, the orientation of this bed leaves enough open wall above it that you could hang a flat-screen TV there if you like. It's a good use of space!

Getting Started

I selected birch plywood for the sheet stock components and maple hardwood for the solid-wood pieces. It is important to use plywood in this construction; MDF or particleboard, while perhaps less expensive, just will not hold up to this use and could eventually become unsafe. The hardwood was used primarily for the interior components.

I got started ripping the plywood workpieces to the dimensions found in the *Material List* on the next page. I followed the cutting diagrams and the step-by-step instructions provided by the hardware manufacturer. In fact, I cut every piece on the list to size before I got busy assembling them. I know that's often not a good idea when building a project — typically it's better to measure and cut parts as you need them to adjust for little deviations here and there, but these part sizes worked out perfectly. I was also careful to mark exactly which piece was which so that I would not get confused later.

Next, I laid out and bored a 5/8"-diameter hole 1/2" deep on each side rail before forming their front curved shapes at my band saw. If you don't have a band saw, a handheld jigsaw with a fine-toothed blade would also work well.

Hardware is the Key

I took some time at this point to become familiar with the hardware. As I mentioned earlier, old-style Murphy beds were often haphazard affairs with some real problems stemming from the use of hardware not created specifically for this sort of functionality. Using this kit from Create-A-Bed changes all that. Even so, it's important that this hardware is



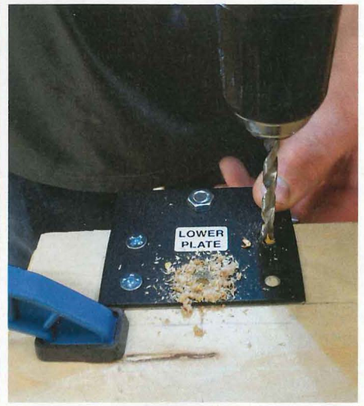

Mount the hardware at the locations shown in the instructions. Then remove it so you can apply a finish without having to mask off the metal parts. You will reinstall them just before assembling the bed frame and cabinet for the final time.

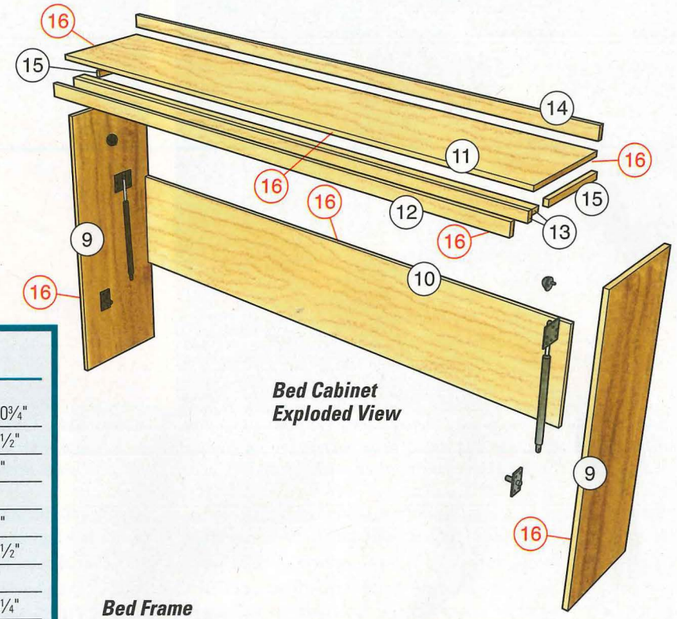

Bed Cabinet Exploded View

MATERIAL LIST

	T x W x L
Bed Frame	
1 Face Panels (2) Ply	3/4" x 39½" x 40¾"
2 Frame Struts (12)	3/4" x 1½" x 37½"
3 Frame Sides (2)	3/4" x 1½" x 77"
4 Foot Rail (1)	3/4" x 3" x 77"
5 Head Rail (1) Ply	3/4" x 7⅞" x 77"
6 Side Rails (2) Ply	3/4" x 5⅞" x 40½"
7 Mattress Support (1) Ply	1/4" x 39" x 77"
8 Leg Support Rail (1)	3/4" x 3/4" x 75¼"
Bed Cabinet	
9 Cabinet Verticals (2) Ply	3/4" x 15⅞" x 45⅜"
10 Bed Headboard (1) Ply	3/4" x 15⅞" x 79⅜"
11 Headerboard (1) Ply	3/4" x 15⅛" x 80⅞"
12 Header Front Rail (1) Ply	3/4" x 2" x 79⅜"
13 Header Front Rail Supports (2)	3/4" x 1½" x 79⅜"
14 Header Rear Rail (1)	3/4" x 2" x 80⅞"
15 Header Mounting Cleats (2)	3/4" x 1" x 12"
16 Iron-on Veneer Tape (2)	13/16" x 75 ft

Bed Frame Exploded View

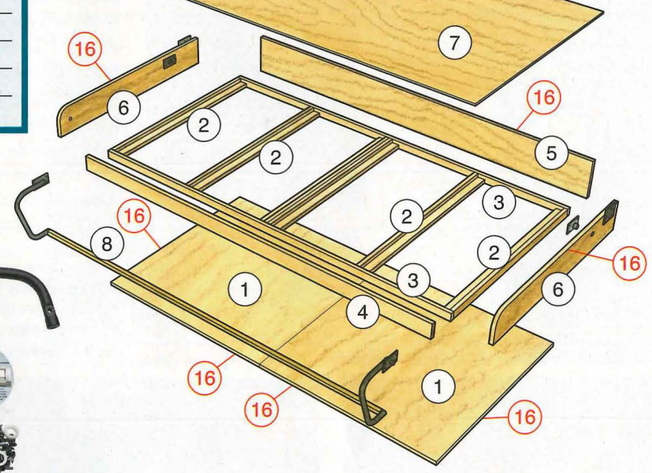



Hideaway Bed Hard-to-Find Hardware

Twin-Size Deluxe Murphy Bed Hardware Kit, Horizontal (1) #45315 .... $299.99 ea.

To purchase these and other products online, visit www.woodworkersjournal.com/hardware *Or, call 800-610-0883 (code WJ1577).*

www.woodworkersjournal.com
MORE ON THE WEB

VIDEO For a video discussing important details about building Murphy beds, please visit woodworkersjournal.com and click on "More on the Web" under the Magazine tab.

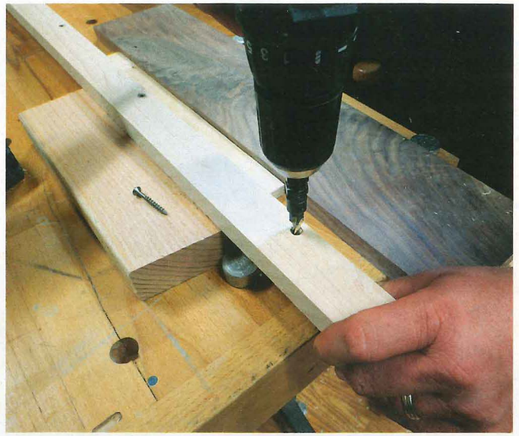

Predrilling is the best way to make certain that the bed frame components are tightly fastened together. Use glue for these joints as well, whenever it makes sense. That way the bed's joinery will be nearly bombproof!



Assembling the bed frame requires a good bit of flat space. By putting the pieces together on top of a sheet of plywood, it is much easier to accurately align them.

mounted accurately to the locations provided in the Create-A-Bed instructions. Take the time now to install the hardware as directed, and then remove it. You will reinstall it after you have applied your finish. The only hardware not supplied in the kit are 1¼" and 1½" screws I used to join the 3/4" components together. With that in mind, I used Titebond II glue to strengthen the screw joints where possible. There is a fair bit of stress when operating the bed, so don't skimp on secure joinery. I also took the time to apply iron-on edge banding to conceal the plywood edges where those would show.

One of the aspects I really liked about this project was that when I had the components cut to their proper dimensions, it went together quickly, like those Erector Set constructions I once made as a kid. I just started assembling the pieces, beginning with the bed frame. I did not have a work surface large enough for the whole bed frame assembly, so I put a piece of plywood on the floor and assembled the parts there instead. The flat surface kept everything well-aligned. I chose wood screws and glue rather than finishing nails to assemble the frame struts. There's nothing difficult about the bed frame's basic butt-joint construction.

The last big construction task is assembling the bed cabinet. There are a few pretty big pieces in this assembly, and I found it helpful to have a friend hold them at times during the process. Again, I did not skimp on screws and glue. I mounted



Applying iron-on hardwood veneer tape is not exactly rocket science, but doing it properly takes a few steps. First, sand the plywood edges smooth. Then use a hot iron to melt the adhesive on the veneer, and press it firmly against the plywood substrate. Carefully trim the veneer flush, making certain there are no overhanging edges that could get snagged later on.

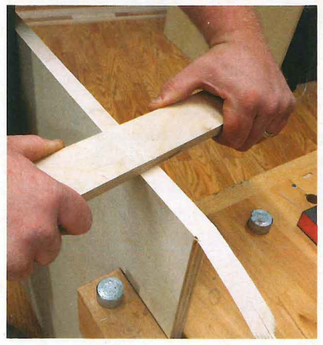









In the photo sequence above, the author mounts the frame struts (pieces 2) to the side rails (pieces 6). The bed face panels (pieces 1) are then secured to the frame subassembly with screws driven down through the frame struts.

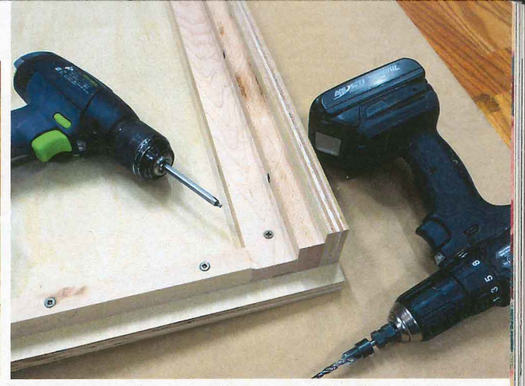

Here you can see the relationship between the header front rail supports (pieces 13) and the header mounting cleats (pieces 15). They are attached to the plywood headerboard (piece 11).

the hardware to these pieces before assembly, as recommended, and then I removed the hardware as before. Create the header subassembly as shown in the photo, above right.

When all the woodworking was done, I applied three coats of Watco Natural oil finish to them. Once it fully cured, I reinstalled the hardware and got ready to put the whole thing together.

Final Assembly and Installation

Assemble the pieces in the room in which the bed will be located. Start out by attaching the mattress retaining straps to the bed frame. With the bed frame laying on the floor (see the instructions), slide the cabinet verticals into the pivot holes on the bed frame. Attach the headboard to the verticals. With the bed frame still on the floor, stand the vertical subassembly up. Attach the header subassembly to the vertical subassembly with glue and screws. Place the bed cabinet a couple of feet from the wall mounting location.

Now it's time to attach the gas springs to the bed cabinet, as directed in the manufacturer's instructions. You'll swing the bed frame inside the cabinet past vertical to attach the gas springs. When that's done, pull the bed out of the cabinet and screw the bed stops in place. Push the bed back into position on the wall and check to make certain the bed frame and cabinet are square.

It's critical at this point to secure the bed to the wall with appropriate fasteners. I used 3" cabinet screws driven into the wall studs through the header's rear rail. These screws must be driven into the walls studs. If you have a hard time locating wall studs on your installation wall, verify the framing with a stud finder. You want to be certain every screw is driven into solid 2x framing members.

Now's the time to add decorative features to the front of the bed, if that's your preference. I did little to modify the cabinet or bed frame with extra ornamentation, but that is always an option. (You can find some really creative treatments for hideaway beds like this on the Internet.) But be sure to plan where the handles will go first, because you will need them.



Using the instructions, locate and attach the hardware before assembling the bed cabinet, then remove it.



Since the headboard is a large piece, securing it with glue and screws might best be done with the help of a buddy holding the other end.



To complete the bed cabinet, glue and screw the header mounting cleats to the bed cabinet verticals.



Here the author drives 3" screws through the header rear rail into the wall studs. This step is critical for safe bed operation.

Place the handles as directed by the instructions. The weight of a mattress helps the bed open and close smoothly. Just be aware that there will be a bit of wrestling with the hardware until the mattress is in place. Secure the mattress to the frame with straps to wrap up construction.

This Murphy bed was fun to build. Adding another bed to a room without needing to dedicate it as a bedroom can be very practical. Perhaps your house or cabin could benefit from this fun space-saving project, just as mine will!

Nick Brady is a Rockler project builder.